High Definition Overview

HD Frame Sizes in Pixels

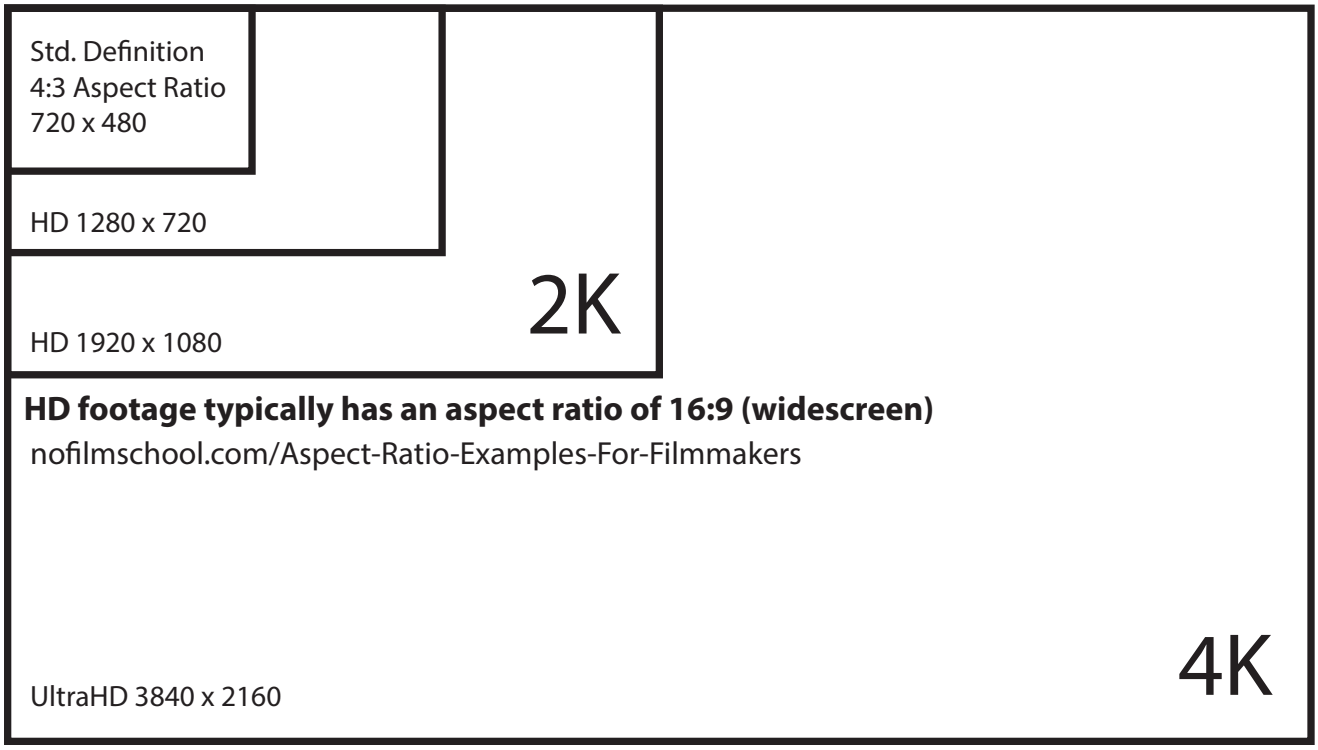

HD footage typically has an aspect ratio of 16:9 (widescreen)
nofilmschool.com/Aspect-Ratio-Examples-For-Filmmakers

Note: As image size increases with more pixels, the data size of the video files increase as well as the rendering times when processing the video and effects in your editing projects.

Progressive vs. Interlaced

There are two ways to record and display the digital video images:
Progressive- (all image lines at once) generally clearer images for motion shots (i.e. 1080P)

Interlaced - (lines in alternating groups) better for transmission of video for broadcast (i.e. 1080i)

FOR YOUR PROJECTS, YOU WILL USE 1080p, 29.97 (30 Frames per second) or 23.97 (24 Frames per second). 30 fps is the traditional video frame rate and 24fps is the standard cinematic framerate.

Note: As image size increases with more pixels, the data size of the video files increase as well as the rendering times when processing effects in your editing projects.

An important part of a successful project is having an understanding of all aspects of the production (shooting) and post-production (editing) workflow. How to go from the camera to the computer, and then outputting to the final braodcast format.

Our Workflow: Shooting with a DSLR or smartphone camera, copying video files to the IMS server folder or an external drive, editing with Premiere Pro and finally outputting to YouTube (using the H.264 YouTube 1080 HD setting).

Camera Basics and Terms

ISO
Fun geeky fact: ISO stands for International Standards Organization, and it's a standardized industry scale for measuring sensitivity to light.
For bright lighting situations/daylight you would use a lower ISO, and a higher ISO for lower light situations. The higher the ISO, the brighter the image for low light situations, but it introduces more grain. The ISO works in conjunction with the shutter and apeture setting in realtion to the brightness/exposure of the image.

Shutter Speed
Set the shutter speed to 1/60 if you are shooting 30FPS and 1/48 if you are shooting 24FPS.
As a rule of thumb, the shutter speed should be double the frame rate, or something that is divisible by the original frame rate.

White Balance/Color Temperature
White Balance is the camera setting that adjusts how colors are rendered in an image. A white balance setting has a numerical value, (Kelvin temperature) however more commonly white balance presets such as daylight, cloudy, flash, or various indoor lighting scenarios. Setting the "correct" white balance setting results in the color of light appearing as close to neutral (white / grey in color) as possible.
Tungsten 3200 Kelvin (Orange/Warm color cast)
Daylight 5600 Kelvin (Blue/Cool color cast)

Aperture
If you are using a camera with a lens, you will be able to adjust the aperture. The aperture is dictated by the lens you are using, and the aperture setting are measured by f-stops. Aperture affects the exposure of an image and also the depth of field (if you are using a lens).

DSLR basics video:
https://vimeo.com/669916901

C100 Quickstart Guide

1) What's in the camera case?

Camera Body, 24-105mm lens, charger, audio handle unit and the battery.

2) Setting up the camera:

a) Remove the camera body cap and the cap on the back of the lens, and attach the 24-105mm f/4 zoom lens to the camera body. This is the standard lens for the C100 camera. Make sure the red dots are lined up, then turn the lens clockwise until you hear the click (Manual-page 31).

b)Attach the audio adapter handle unit, and connect the audio cable to the camera (EXT connection on the side of the camera)(Manual-page 34).

c) Attach the battery to the camera, and turn the POWER switch to CAMERA(Manual-page 36).

d) Move the LCD screen, and open the SD card door panel, and check that there is an SD card in one of the slots(Manual-page 41).

e) Format(initialize) the SD card by pressing the MENU button on the LCD screen (Manual-page 42).

f) Set the Movie Format record mode/bit rate and resolution/frame rate: **MP4, 24Mbps 1920x1080, 29.97 or 23.97 frame rate**
(Manual-page 54/55).

g) Look at the onscreen display on the LCD display to make sure you are in the correct record mode

3) Basic shooting settings

a) Set the ISO for your shoot (Manual-page 60).
Bright daylight-start at 320 ISO. Native ISO for the C100 is 850
The higher the ISO, the brighter the image for low light situations, but it introduces more grain. The ISO works in conjunction with the shutter and apeture setting in realtion to the brightness/exposure of the image. Fun geeky fact: ISO stands for International Standards Organization, and it is a standardized industry scale for measuring sensitivity to light.

b) Set the shutter speed to 1/60 because you are shooting 30FPS. The shutter speed should be double the frame rate, or something that is divisible by the original frame rate (Manual-page 57).

c) Adjust the aperture using the control dial (Manual-page 63). The aperture is dictated by the lens you are using. The 24-105mm has f/4 are the lowest f-stop.

d) To control the brightness while keep the aperture in the apropriate range, use the ND filter (Manual-page 62). There are 4 ND filter settings: 2 Stops, 4 stops and 6 stops and OFF.

e) Set the white balance (Manual-page 68). You can choose a preset (i.e. daylight or tungsten), or select an custom white balance setting. The color temperature is measured in Kelvin (K) numbers
(3200K is and 5600K is daylight).

4) Recording and viewing clips

a) Press the red START/STOP button to record a clip (Manual-page 48).

b) To view the clips turn the POWER switch to MEDIA (Manual-page 125).

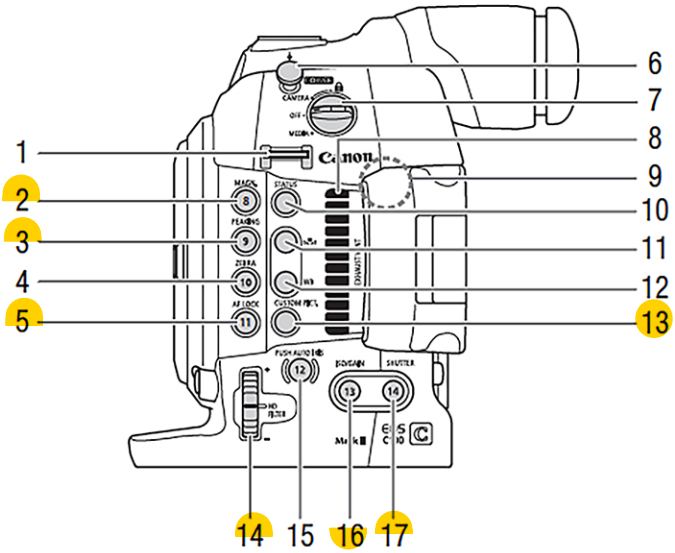

1 Strap mount (📖 39)
2 MAGN. (magnification) button (📖 73)/ Assignable button 8 (📖 107)
3 PEAKING button (📖 72) / Assignable button 9 (📖 107)
4 ZEBRA button (📖 79)/ Assignable button 10 (📖 107)
5 AF LOCK (autofocus lock) button (📖 75)/ Assignable button 11 (📖 107)
6 Tape measure hook
Use the hook to accurately measure the distance from the focal plane.
7 POWER switch (📖 25)
8 Exhaust ventilation outlet (📖 52)
9 Wi-Fi antenna (📖 145)
10 STATUS button (📖 176)
11 (white balance adjustment) button (📖 68)
12 WB (white balance) button (📖 68)
13 CUSTOM PICT. (custom picture) button (📖 111)
14 ND FILTER dial (📖 62)
15 PUSH AUTO IRIS (momentary automatic aperture) button (📖 65)/Assignable button 12 (📖 107)
16 ISO/GAIN button (📖 61)/Assignable button 13 (📖 107)
17 SHUTTER button (📖 58)/Assignable button 14 (📖 107)

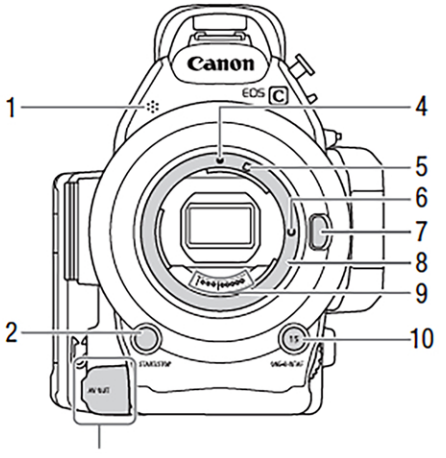

1 Monaural microphone (📖 84)
2 START/STOP button (📖 47)
3 AV OUT terminal (📖 138)
4 EF Lens mount index (📖 31)
5 EF-S Lens mount index (📖 31)
6 EF Lens lock pin (📖 31)
7 Lens release button (📖 32)
8 EF Lens mount (📖 31)
9 EF Lens contacts (📖 31)
10 ONE-SHOT AF (focus automatically once) button (📖 74)/Assignable button 15 (📖 107)

Handle Unit

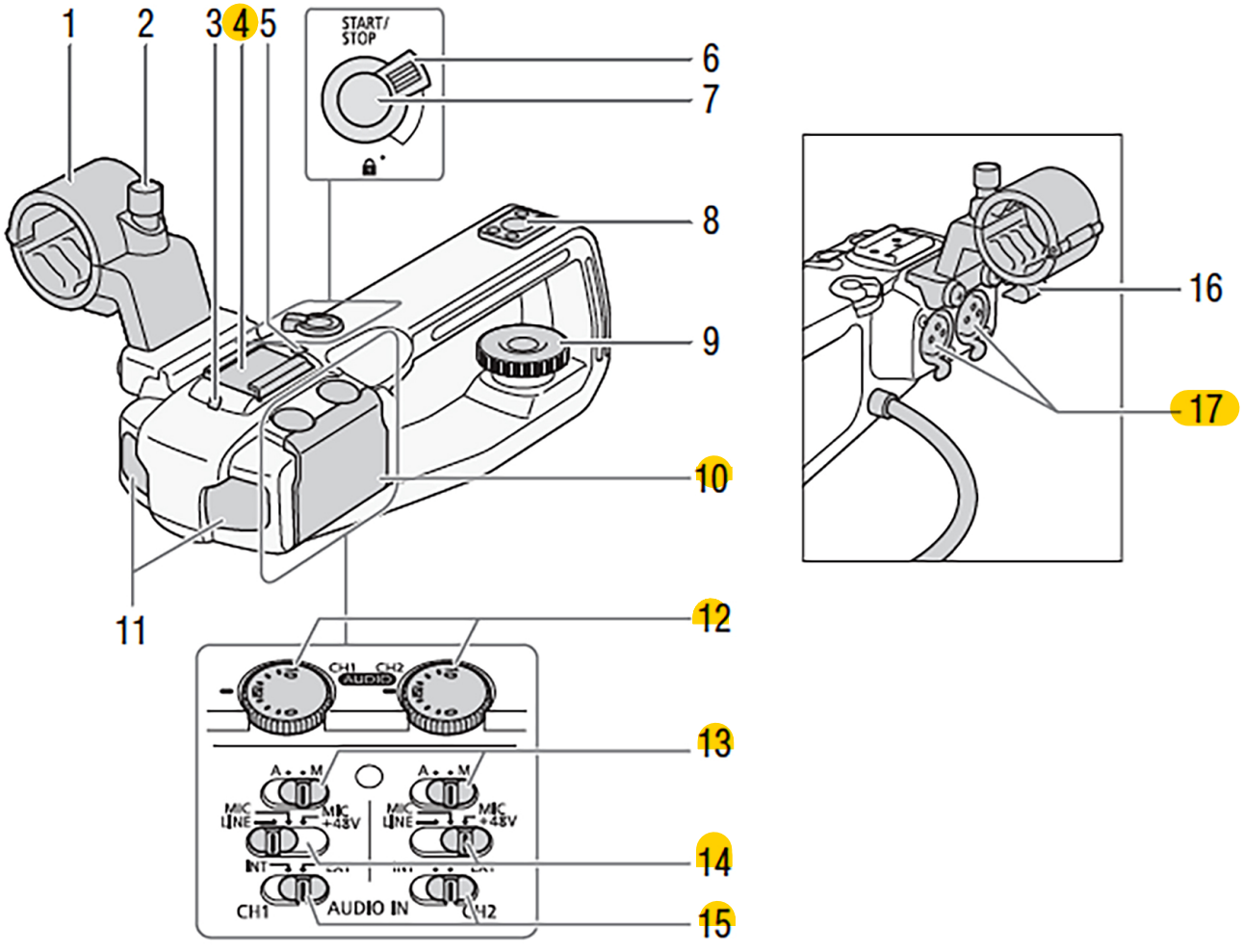

1 Microphone holder (📖 84)
2 Microphone lock screw (📖 84)
3 Front tally lamp (📖 47)
4 Cold accessory shoe
5 Rear tally lamp (📖 47)
6 START/STOP lock (🔒) lever (📖 49)
7 START/STOP button (📖 47)
8 Mounting hole for 0.64 cm (1/4 in.) screws
9 Lock screw (📖 34)
10 Protective cover for audio controls
11 Built-in microphone (📖 85)
12 AUDIO (audio level) dials for CH1 (left) and CH2 (right) (📖 85, 89)
13 Audio level switches for CH1 (left) and CH2 (right) (📖 85, 89)
14 XLR terminal switches for CH1 (left) and CH2 (right) (📖 88)
15 AUDIO IN (audio input selection) switches for CH1 (left) and CH2 (right) (📖 85, 88)
16 Microphone cable clamp (📖 84)
17 XLR terminals CH1 (right) and CH2 (left) (📖 84)